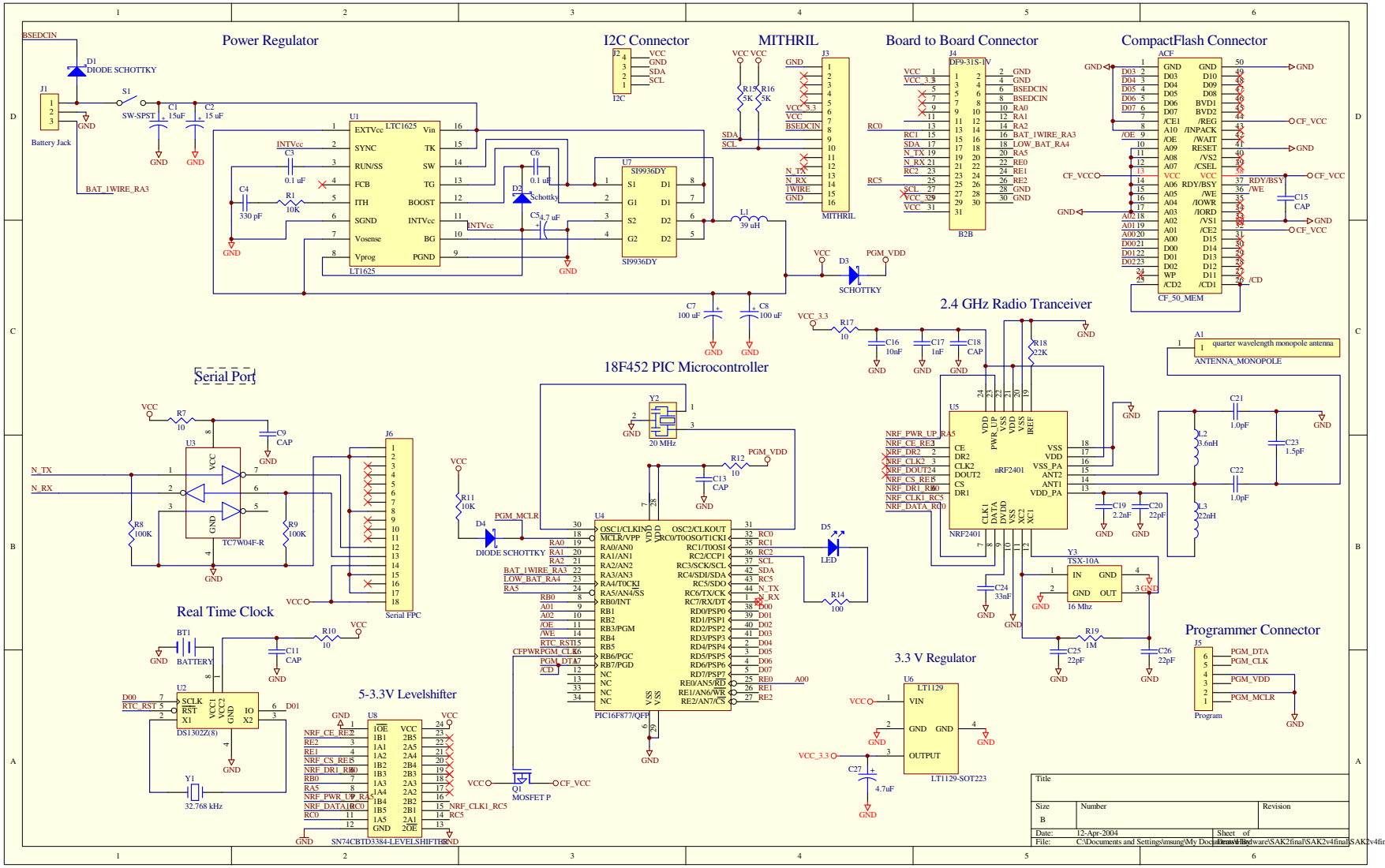
Power Regulator
I2C Connector
MITHRIL
Board to Board Connector
CompactFlash Connector
2.4 GHz Radio Tranceiver
18F452 PIC Microcontroller
Serial Port
Real Time Clock
5-3.3V Levelshifter
3.3 V Regulator
Programmer Connector
Battery Jack
SW-SPST
DIODE SCHOTTKY
LT1625
SI9936DY
DF9-31S-IV
B2B
MITHRIL
CF_50_MEM
nRF2401
TC7W04F-R
Serial FPC
DS1302Z(8)
32.768 kHz
SN74CBTD3384-LEVELSHIFTER
PIC16F877/QFP
MOSFET P
LT1129-SOT223
TSX-10A
16 Mhz
20 MHz
quarter wavelength monopole antenna
ANTENNA_MONOPOLE
Program
Title
Size
B
Number
Revision
Date: 12-Apr-2004
Sheet of
File: C:\Documents and Settings\msung\My Documents\Hardware\SAK2final\SAK2v4final.ddb