Miminum wiring to start using the PIC16F88

(Not Really, but if we want to make something useful)

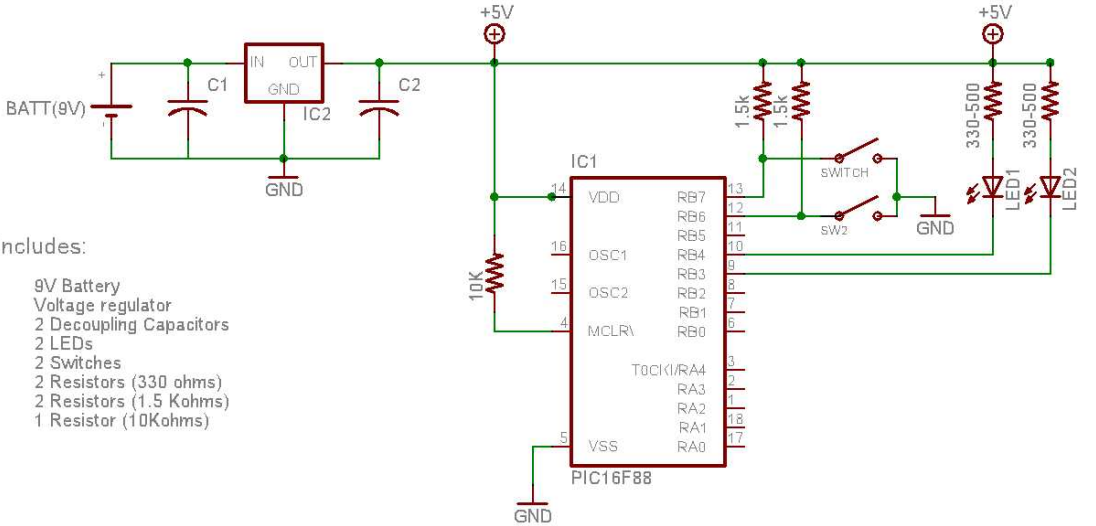

Includes:

- 9V Battery
- Voltage regulator
- 2 Decoupling Capacitors
- 2 LEDs
- 2 Switches
- 2 Resistors (330 ohms)
- 2 Resistors (1.5 Kohms)
- 1 Resistor (10Kohms)